6” Trash Pumps

Available on trailer or skid

Backed By CH&E
Limited Warranty

7628T Trailer Mounting

Diesel Engine Powered

Pump Specifications

Pump	7628
Size	6” x 6” Female NPT
Construction	Class 30 Cast Iron
Shaft	Nikrome Alloy Steel
Impeller	Ductile Iron – 3 Vane – Passes 3” Spherical Solids
Volute	Ductile Iron
Seal	Double Grease Seal – Spring (SS) Loaded Carbon Ceramic Faces
Cover	Class 30 Cast Iron
Bearings	2 Single Row Ball Bearings
Check Valve	Cloth Reinforced Rubber
Valve Seat	Class 30 Cast Iron
Gaskets	Cellulose Fiber & Buna
“O” Rings	Neoprene
Suction Elbow	Class 30 Cast Iron

STANDARD EQUIPMENT

- 90° Discharge Elbow
- Structural Steel Skid Base
- Trailer Package:
  Highway Tires, DOT Light Pintle (Ring) Hitch,
  Safety Chains, Front & Rear Jack Stands

STANDARD EQUIPMENT Cont’d.

- Fenders
- Torsion Axle Suspension
- 40 Gallon Fuel Tank

OPTIONAL EQUIPMENT

- Shutdown – Loss of Pressure
- Ball Hitch
- Warning Light – (amber) 12 Volt
- Seals
  Tungsten / Carbide
  Silicon / Carbide
- Electric Brakes
- Surge Brakes
- Tongue Jack with Wheel

WARNING
DO NOT USE IN EXPLOSIVE ATMOSPHERE OR FOR PUMPING VOLATILE FLAMMABLE LIQUIDS

6” Trash Pump

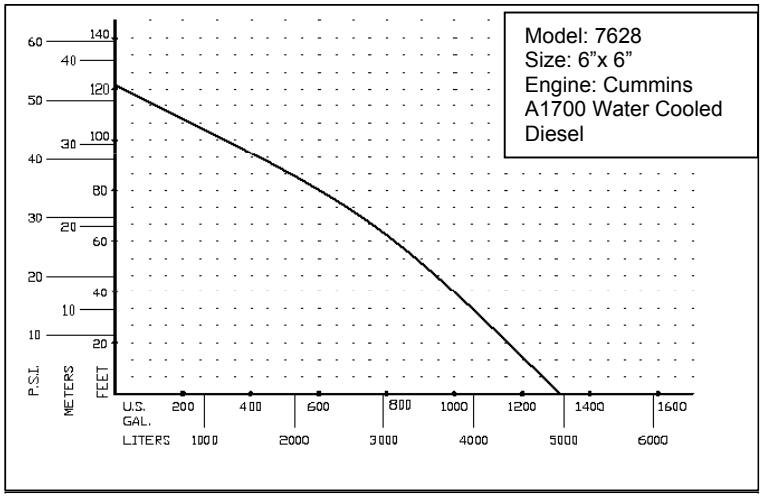

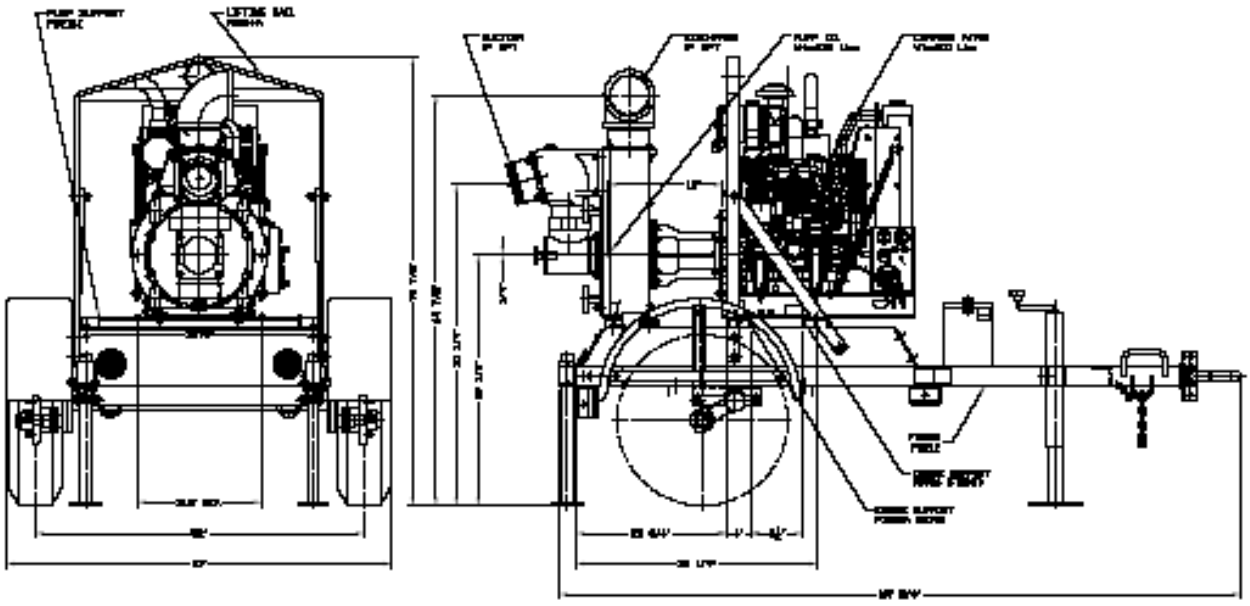

ENGINE SPECIFICATIONS

MODEL:	Cummins A1700
TYPE:	Diesel (Turbo)
DISPLACEMENT:	2.4 liter (146 CID)
COOLING:	Water
AIR CLEANER:	Dry Type
STARTER:	12 Volt Electric
ALTERNATOR:	42 A.
MUFFLER:	Std. with Rain Cap

Max. Dyn. BHP 49 (37kW) Operating at 2800 RPM

STANDARD ON ENGINE

High Temp. & Low Oil Shutdown
Hour Meter – Tachometer - Ammeter – Oil Pressure & Temp. Gauge - Key Switch - Mounted in Vibration Mounted Steel Control Box

FEATURES

- **EASY ACCESS TO ALL PARTS**
  Without Disturbing Suction or Discharge Line
- **DEPENDABLE PRIMING**
  At Maximum Suction Lifts, Simply Fill the Pump Case with Priming Water and Run at Full Throttle
- **EASY OPENING CLEANOUT WITH HAND SCREWS**
  Access to Internal Wear Parts Including the Seal without Removing the Suction Line
- **SOLIDS HANDLING TRASH PUMP**
  Pumps Raw Sewage –By -Pass Manholes, and Pump Septic Tanks
- **CAST IRON CONSTRUCTION**
  All Iron Pump with Ductile Impeller and Replaceable Ductile Iron Volute Stands up to the Rigors of Construction & Rentals as well as Municipal and Industrial Applications