Peerless Pump

General Purpose
End Suction

The Peerless Pump F Series Pumps

are general purpose, frame mounted, end suction pumps flexibly coupled to drivers and equipped with coupling guards. Each entire unit can be mounted on a steel base. An optional drip pan is available.

Applications

Peerless F Series pumps are designed for applications in medium duty service, providing maximum pump value in heating and air conditioning, booster and general circulating service.

Features

The F Series pump is available in cast iron bronze fitted and all iron construction. Packed boxes or mechanical seals are available.

Pump casing is fi tted with a **bronze/steel replaceable wear ring**. The pipe connection fl anges are equivalent 125# ANSI flanges rated for 175# Maximum Working Pressure (MWP).

Motor bearings are **grease lubricated** and are sized for a minimum of 20,000 hours L10 basic rating life or 100,000 hours median bearing life. Shaft is designed to limit the shaft deflection to no more than .002" at the seal faces.

The motor/impeller shaft is protected with a **replaceable (bronze/stainless steel) sleeve** installed between the shaft and the packing or mechanical seal.

Mechanical seals are designed for water service and light hydrocarbons up to 250^0 F. Seals are face type with Ni-resist seat, carbon washer, 18-8 stainless steel metal parts and Viton elastomers.

Series F pumps are furnished with enclosed dynamically balanced impellers for **smooth, low vibration operation**. The impeller is keyed to the shaft for positive driving and is secured in place with a stainless steel washer and self-locking cap screw.

The impeller diameter is **no more than 90 percent** of the maximum impeller diameter which the case tongue or cut-water could accommodate. This design feature results in **low hydraulic noise levels**.

Quality Engineering

Peerless Pump designs tough, versatile products to meet your pumping needs. The F Series delivers **variety, durability, standardized options and configurations** unequalled in the industry. Please contact your local authorized Peerless Pump sales office to find out more about the F Series, options and prices.

Specifications

Capacities: . . . . . Up to 3000 gpm (675 m^3/h)
Head: . . . . . Up to 400 feet (122 m)
Pressure: . . . . . Up to 175 psi (12.3 kg/cm^2, 1,206 kPa)
Horsepower: . . . . . Up to 125 hp (93 kW)
Temperature: . . . . . From 32 °F to 250 °F (0 °C to 120 °C)
Drives: . . . . . NEMA Electric Motors
Liquids: . . . . . Water and Light Hydrocarbons
Materials: . . . . . CI 30 CI, Bronze

Peerless Pump

General Purpose End Suction
F Pump

F Series Range Chart - 1750 RPM

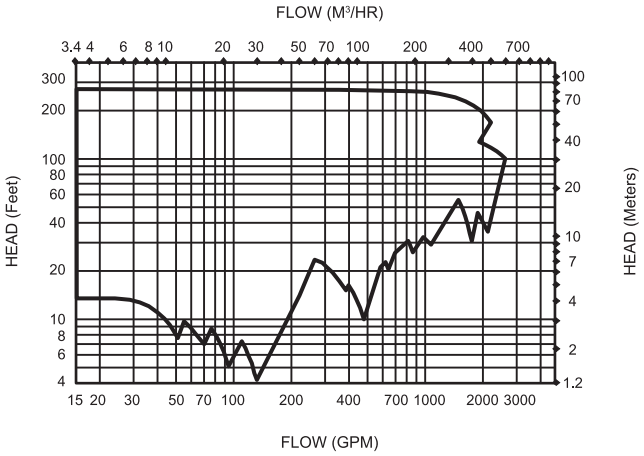

F Series Range Chart - 3500 RPM

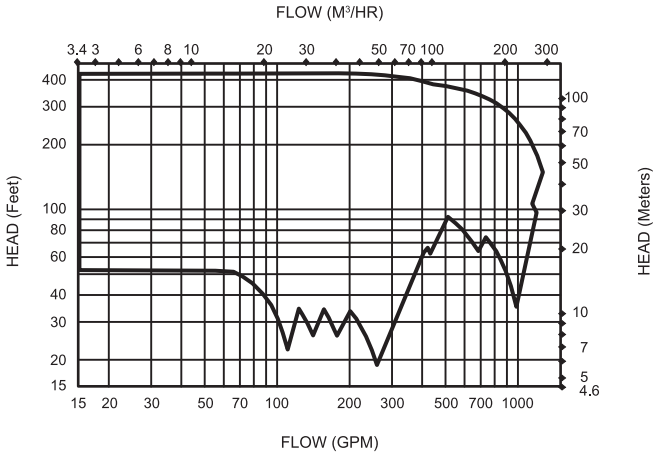

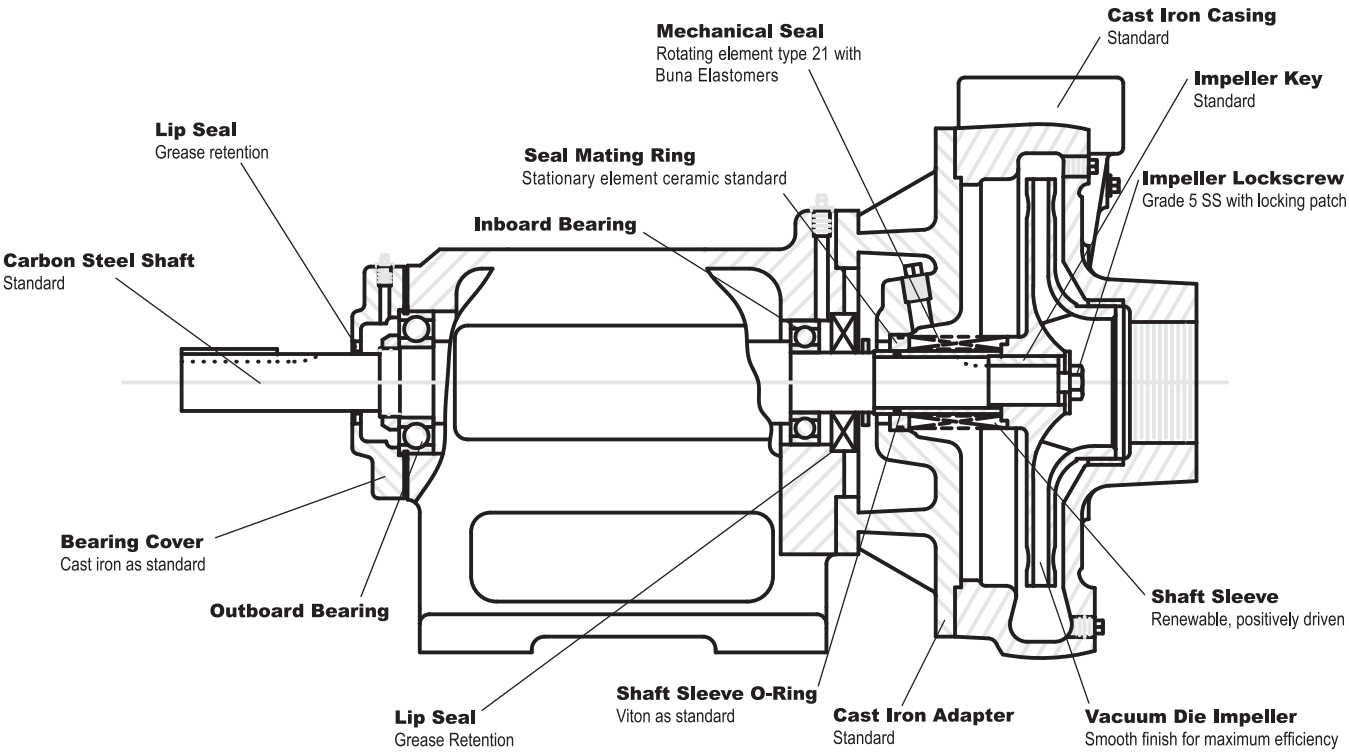

PEERLESS PUMP

Unequaled | Unrivaled | Performance

ISO 9001:2000

Peerless Pump - 2005 Dr Martin Luther King Jr Street, Indianapolis, IN 46202
Ph: (317) 925-9661 • fax: (317) 924-7388 • www.peerlesspump.com • www.epumpdoctor.com

Brochure B-2302 - This brochure's contents subject to change without notice.

Copyright © 2010 Peerless Pump Company