# All-Plastic Swing Check Valves

## 3", 4", 6" and 8" – PVC, PPL and **Corzan**® CPVC

### Twice The Temperature/Pressure Rating Of Other Plastic Swing Check Valves

Hayward swing check valves have up to twice the temperature/pressure rating of other plastic swing check valves…and can often replace metal valves in many applications. Compare the temperature/pressure rating of Hayward Swing Check Valves to others — and see the difference.

### Unique Two-In-One Seat™ Design

Swing check valves are often used with slurries or other liquids that can damage the valve seat. A damaged seat in an ordinary swing check results in a useless, destroyed valve. But not with Hayward Swing Check Valves. They feature a unique *Two-In-One Seat* ™ design that doubles the valve's service life. The valve body is constructed from two identical halves. If one seat is damaged, simply re-position the clapper so that it seats against the other body seat. Then reverse the valve in the pipeline. The valve is again ready for service.

### Built-In O-Ring Flange Seals

Hayward Swing Check Valves are furnished ready for installation with two built-in O-ring flange seals. There is no need to purchase additional, expensive flange gaskets.

### Self-Aligning Clapper Seal

Bubble-tight checking, with a minimum of only 3 psi back pressure, is assured with Hayward's rugged, self-aligning clapper seal design.

### No Corrosion — Ever!

Because of their all-plastic construction, Hayward Swing Check Valves will never stick or jam as a result of rust or corrosion. And they can survive corrosive environments and harsh weather conditions, places where a metal check valve has to be painted or epoxy-coated just to survive.

## Features

- FPM or EPDM seals
- Flanged Connections
- Two Drain Ports
- Horizontal or Vertical Installation
- No flange gaskets required

Corzan® CPVC is a trademark of Noveon, Inc.

## Options

- Counterweight for Closing Assistance
- Limit Switch for Position Indication
- Spring Assist Closure

# Technical Information

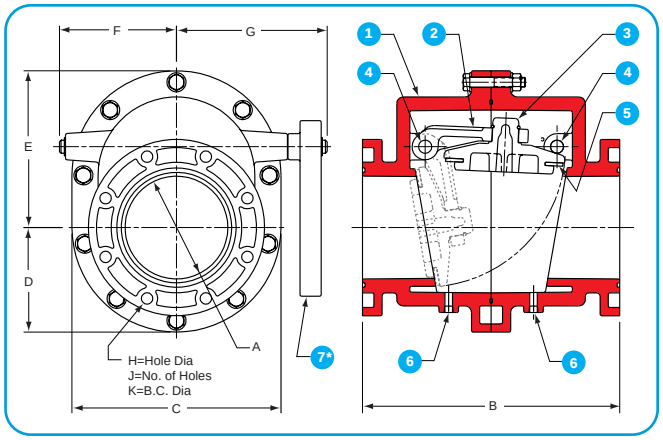


## Parts List

1. Body
2. Swing Arm
3. Clapper
4. Shaft*
5. Seal
6. Drain Plug (2)
7. Counter Weight (Optional)

**PVC with PVC valves*
*PVDF with PPL valves*
*CPVC with CPVC valves*

## Selection Chart

| Sizes | Material | End Conn. | Seals | Pressure Rating |
|---|---|---|---|---|
| 3" and 4" | PVC, Glass Reinforced PPL or CPVC | Flanged | Viton or EPDM | 225 psi @ 70F |
| 6" and 8" | | | | 150 psi @ 70F |

## Dimensions - Inches / Millimeters

| Size | A | B | C | D | E | F | G | H | J | K | Minimum Back Pressure To Close - PSI | Weight (lb / kg) |
|---|---|---|---|---|---|---|---|---|---|---|---|---|
| Inches/Millimeters | | | | | | | | | | | | |
| 3 / 75 | 3.00 / 76 | 10.24 / 260 | 7.50 / 190 | 3.75 / 95 | 5.21 / 132 | 3.90 / 99 | 4.91 / 48 | 0.625 / M16 | 4 | 6.00 / 150 | 3 | 10 / 4.5 |
| 4 / 100 | 3.90 / 99 | 11.81 / 300 | 9.25 / 235 | 4.63 / 117 | 6.75 / 171 | 4.80 / 122 | 6.15 / 156 | 0.625 / M16 | 8 | 7.50 / 180 | 3 | 21 / 9.5 |
| 6 / 150 | 5.91 / 150 | 15.75 / 400 | 12.75 / 323 | 6.38 / 162 | 9.25 / 235 | 6.47 / 164 | 8.30 / 210 | 0.75 / M20 | 8 | 9.50 / 240 | 3 | 47 / 21.4 |
| 8 / 200 | 7.87 / 199 | 19.69 / 500 | 16.00 / 406 | 8.00 / 203 | 12.00 / 304 | 8.96 / 227 | 11.54 / 293 | 0.75 / M20 | 8 | 11.75 / 295 | 3 | 90 / 41.0 |

DIN metric flange standard

## Operating Temperature/Pressure

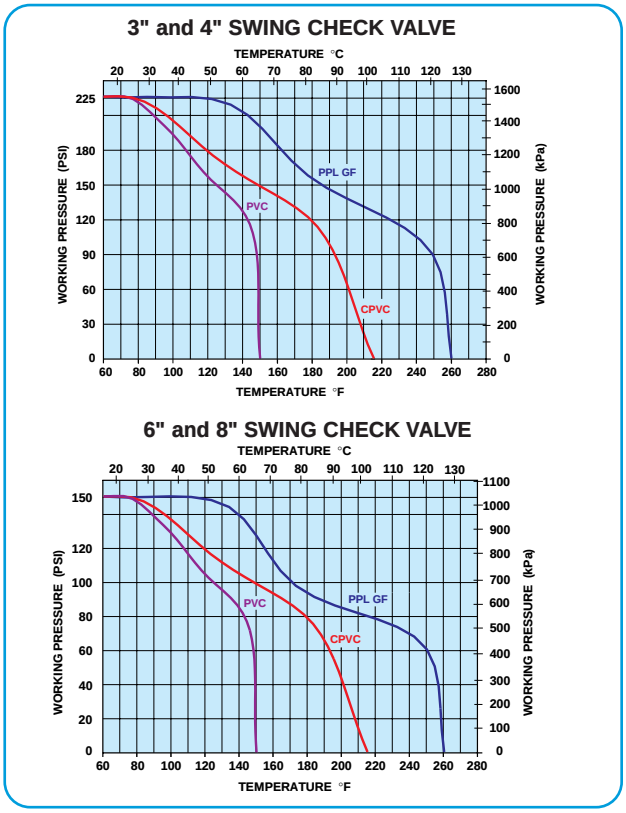


## Cv Factors

| Valve Size | Factor |
|---|---|
| 3" | 328 |
| 4" | 514 |
| 6" | 1278 |
| 8" | 2549 |

**Pressure Loss Calculation Formula**

$$\Delta P = \left[\frac{Q}{Cv}\right]^2$$

ΔP = Pressure drop
Q = Flow in GPM
Cv = Flow coefficient

## Features

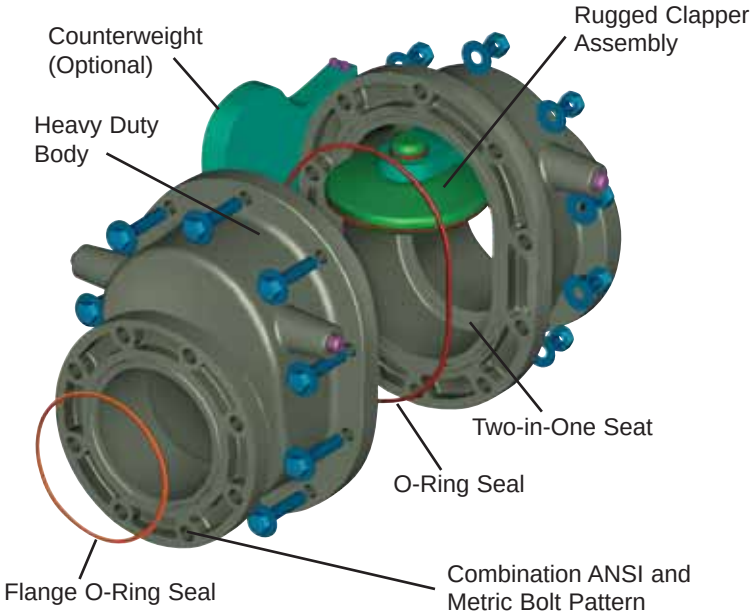


HAYWARD®

FlowControl SYSTEMS


**Hayward Industrial Products, Inc.**
One Hayward Industrial Drive, Clemmons, NC 27012
Tel: 1-888-429-4635 (1-888-HAYINDL) • Fax: 1-888-778-8410
E-mail: hflow@haywardnet.com
Web Site: http://www.haywardindustrial.com



MC-2-SWCHK Rev. 6 Printed in U.S.A.